3 Sector Clamp

Specification

Product Number			KCLSM1C39001
Weight	3 Sector Clamp	2 EA	2.3 kg (5 lbs) x 2 EA = 4.6 kg(10 lbs)
	Mounting Clamp	4 EA	1 kg (2.2 lbs) x 4 EA = 4 kg (8.8 lbs)
	Antenna Bracket	6 EA	0.9 kg (2 lbs) x 6 EA = 5.4 kg (12 lbs)
	Total		15.6 kg (34.3 lbs)
Material	3 Sector Clamp		Galvanized steel [SS400]
	Mounting Clamp		Galvanized steel [SS400]
	Antenna Bracket		Galvanized steel [SS400]
	Bolts & Nuts		STS304
Mounting Pole (Ø)			88.9 ~ 152.4 mm (3.5 ~ 6 inch)
Steering angle of Horizontal			± 10°
Packing Size (W x D x L)			310 x 370 x 320 mm (12.2 x 14.5 x 12.6 inch)
Shipping weight			18 kg (39.7 lbs)

Clamp Configuration

Upper Clamp

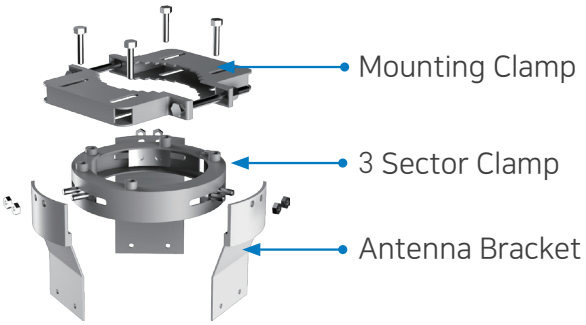

Lower Clamp



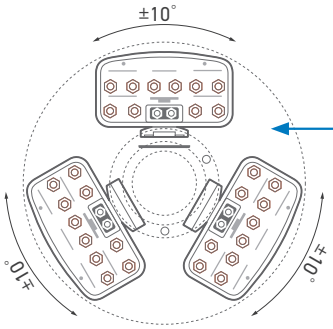

Total Diameter
Ø 650 mm (25.6")